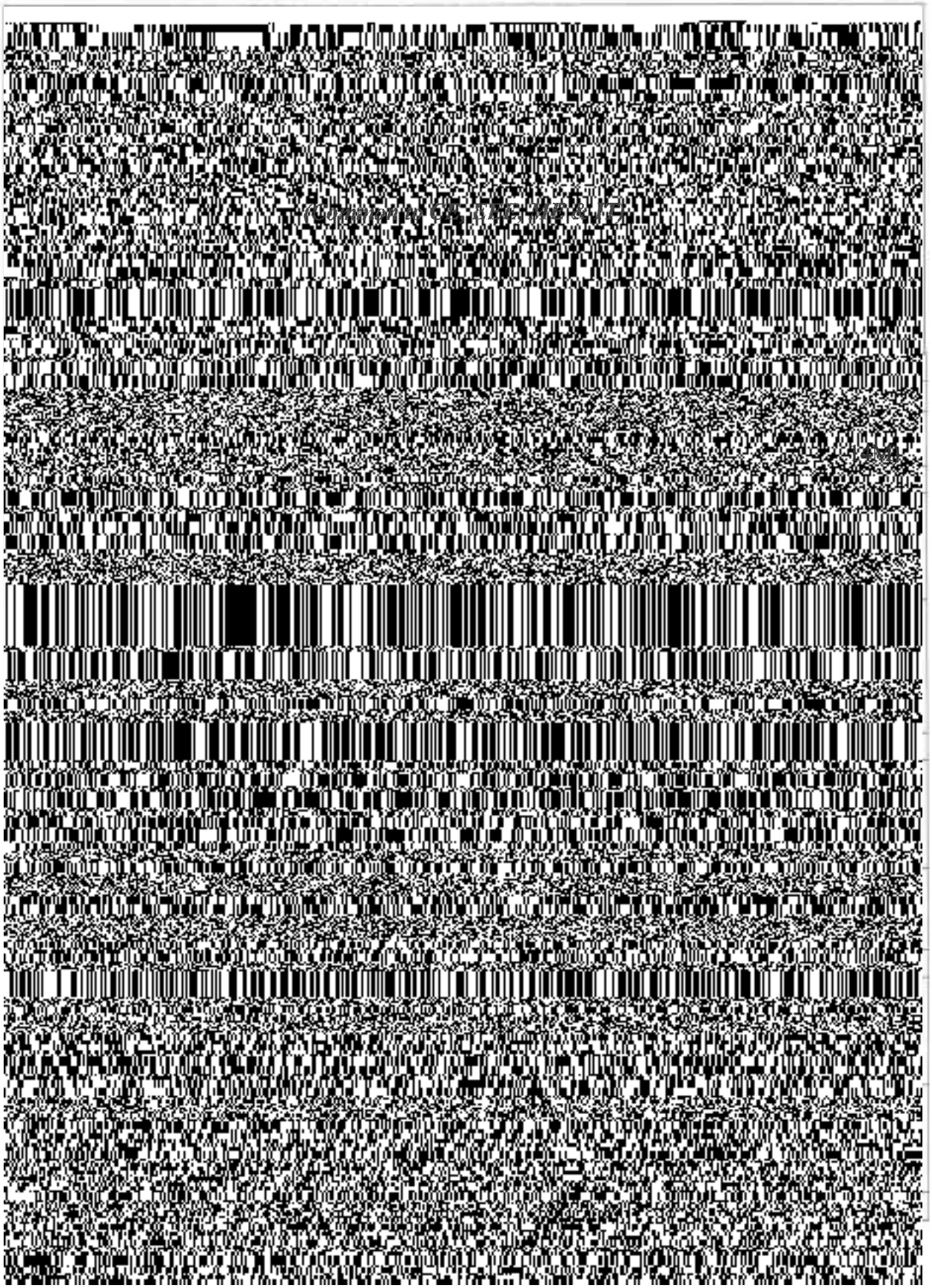

8	A cone of base 50 mm diameter and axis 75 mm long, is lying on the H.P. on one of its generators with the axis parallel to the V.P. A section plane which is parallel to the V.P. cuts the cone at an angle of 45^0 bisecting the axis. Draw its true shape and development of the surface of the remaining portion of the cone. (14M)
9	An isometric view of a solid is shown in figure. Draw the front, top and right side orthographic views of the solid. (14M) 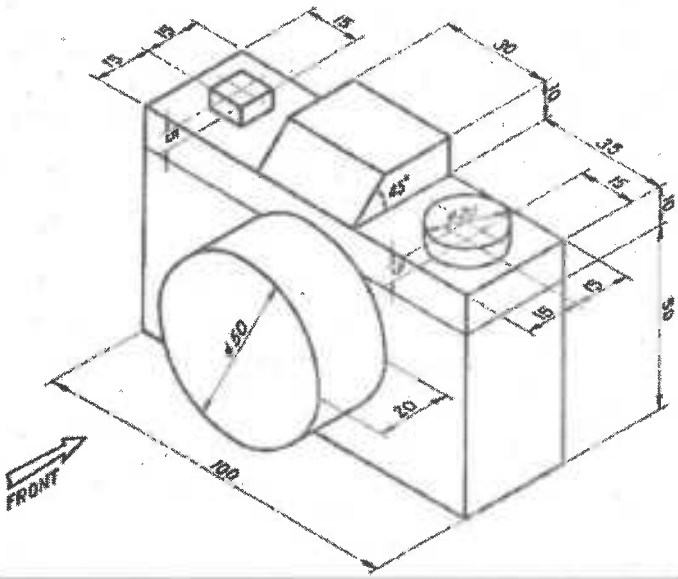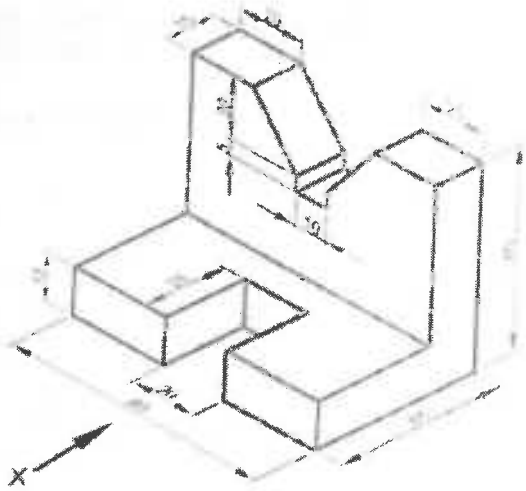
	OR
10	An isometric view of a solid is shown in figure. Draw the front, top and right side orthographic views of the solid. (14M)